Surname	Centre Number	Candidate Number
First name(s)		0

GCSE

3601U10-1

S25-3601U10-1

WEDNESDAY, 18 JUNE 2025 – MORNING

DESIGN AND TECHNOLOGY

Unit 1
ENGINEERING DESIGN

2 hours

For Examiner's use only		
Question	**Maximum Mark**	**Mark Awarded**
1.	**10**	
2.	**10**	
3.	**15**	
4.	**20**	
5.	**20**	
6.	**25**	
Total	**100**	

3601U101
01

ADDITIONAL MATERIALS

In addition to this examination paper, you will need a calculator.

INSTRUCTIONS TO CANDIDATES

Use black ink or black ball-point pen. Do not use gel pen or correction fluid.

You may use a pencil for graphs and diagrams only.

Write your name, centre number and candidate number in the spaces at the top of this page.

Answer **all** questions.

Write your answers in the spaces provided in this booklet. If you run out of space, use the additional page(s) at the back of the booklet, taking care to number the question(s) correctly.

INFORMATION FOR CANDIDATES

The number of marks is given in brackets at the end of each question or part-question. You are advised to divide your time accordingly.

The total number of marks available is 100.

You are reminded of the need for good English and orderly, clear presentation in your answers.

The quality of your written communication, including appropriate use of punctuation and grammar, will be assessed in your answer to question **4**(a).

JUN253601U10101

© WJEC CBAC Ltd.

Examiner only

Answer **all** questions.

1. Study the images below of the Dyson hair straighteners.

(a) Dyson use 'primary research' to gather important information from the market. Describe **two** methods of collecting primary research. 2 × [2]

Primary Research Method 1: .....

.....

.....

.....

Primary Research Method 2: .....

.....

.....

.....

(b) Describe what is meant by the term 'secondary research'. [2]

.....

.....

.....

© WJEC CBAC Ltd.

Examiner only

(c) Explain the advantages of using anthropometric data when designing and modelling the ergonomics of the Dyson hair straighteners. [4]

.....

.....

.....

.....

.....

.....

3601U101 03

© WJEC CBAC Ltd.

Examiner only

2. The diagram below relates to the 6Rs of sustainability.

(a) Complete the table by filling in the **two** missing Rs of sustainability. 2 × [1]

Higher priority

Lower priority

	Rethink
	.....
	Reduce
	Reuse
	.....
	Recycle

© WJEC CBAC Ltd.

Examiner only

(b) Explain why 'Recycle' is the lowest priority when designing a product compared to other Rs of sustainability. [4]

.....

.....

.....

.....

.....

.....

(c) Explain **one** advantage and **one** disadvantage of reusing a PCB (printed circuit board) to produce the cover of the notebook shown below. 2 × [2]

Advantage: .....

.....

.....

Disadvantage: .....

.....

.....

3601U101 05

© WJEC CBAC Ltd.

Examiner only

3. Modern and smart materials often provide designers with opportunities to develop innovative products.

(a) Describe what is meant by the term 'smart material'. [2]

.....

.....

.....

(b) (i) Complete the table below by selecting the **two** correct names for the smart materials shown in each image. 2 × [1]

Polymorph **Quantum Tunnelling Composite (QTC)**

SMA (shape memory alloy) **Thermochromic**

.....	.....

(ii) Select **one** of the smart materials listed above, name a different product and explain how this smart material enhances the product's function.

Named product: ..... [1]

Explanation: .....

.....

.....

.....

.....

..... [3]

© WJEC CBAC Ltd.

Examiner only

(c) The ski goggles shown below use a magnet to attach the lens.

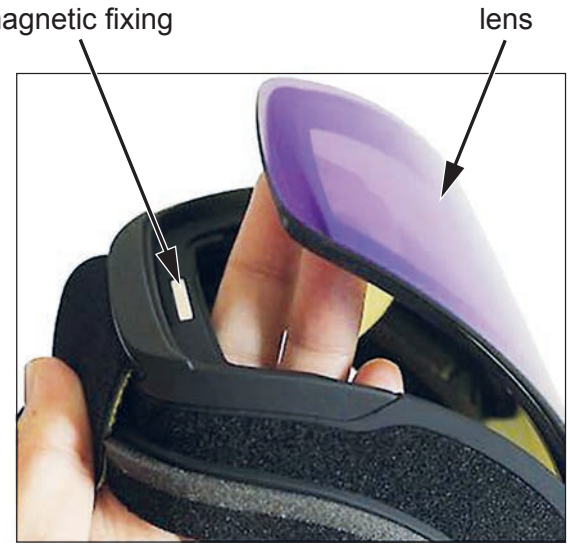

(i) Explain the benefit to the user of using a magnetic fixing. [3]

.....

.....

.....

.....

.....

(ii) A photochromic lens is used to replace the existing lens in the ski goggles.

Explain how the new photochromic lens will function and how this benefits the user. [4]

.....

.....

.....

.....

.....

.....

3601U101 07

© WJEC CBAC Ltd.

BLANK PAGE

PLEASE DO NOT WRITE ON THIS PAGE

© WJEC CBAC Ltd.

Examiner only

4. Study the images below of the successful products from Shigeru Miyamoto and Apple.

(a) Analyse how the user interface for these products is so successful. [10]

Marks will be awarded for the content of the answer and the quality of written communication.

.....

.....

.....

.....

.....

.....

.....

.....

.....

.....

.....

.....

3601U101 09

© WJEC CBAC Ltd.

Examiner only

(b) The image below shows an automatic water dispenser. The water dispenser uses a PIC (Programmable Interface Controller) IC to control the flow of water from a pump when the bottle is near the sensor.

(i) Complete the block diagram by adding the input, process and output components for the automatic water dispenser. [3]

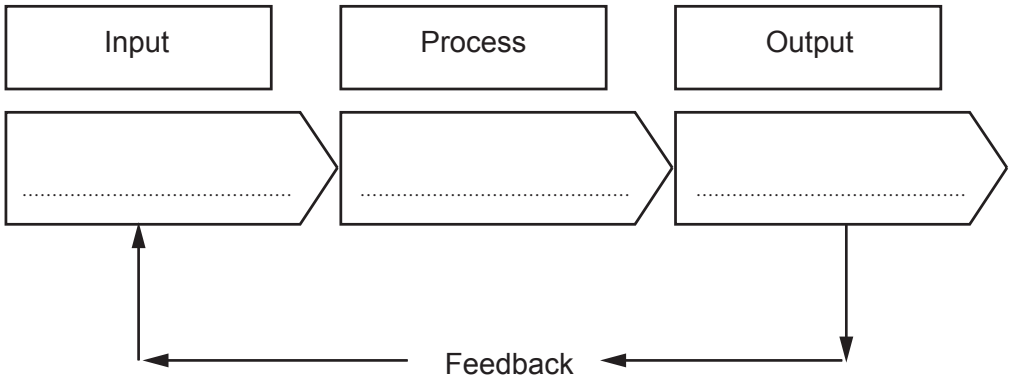

(ii) Describe the use of feedback in the block diagram. [2]

.....

.....

.....

© WJEC CBAC Ltd.

Examiner only

(c) Study the circuit diagram below used in the automatic water dispenser.

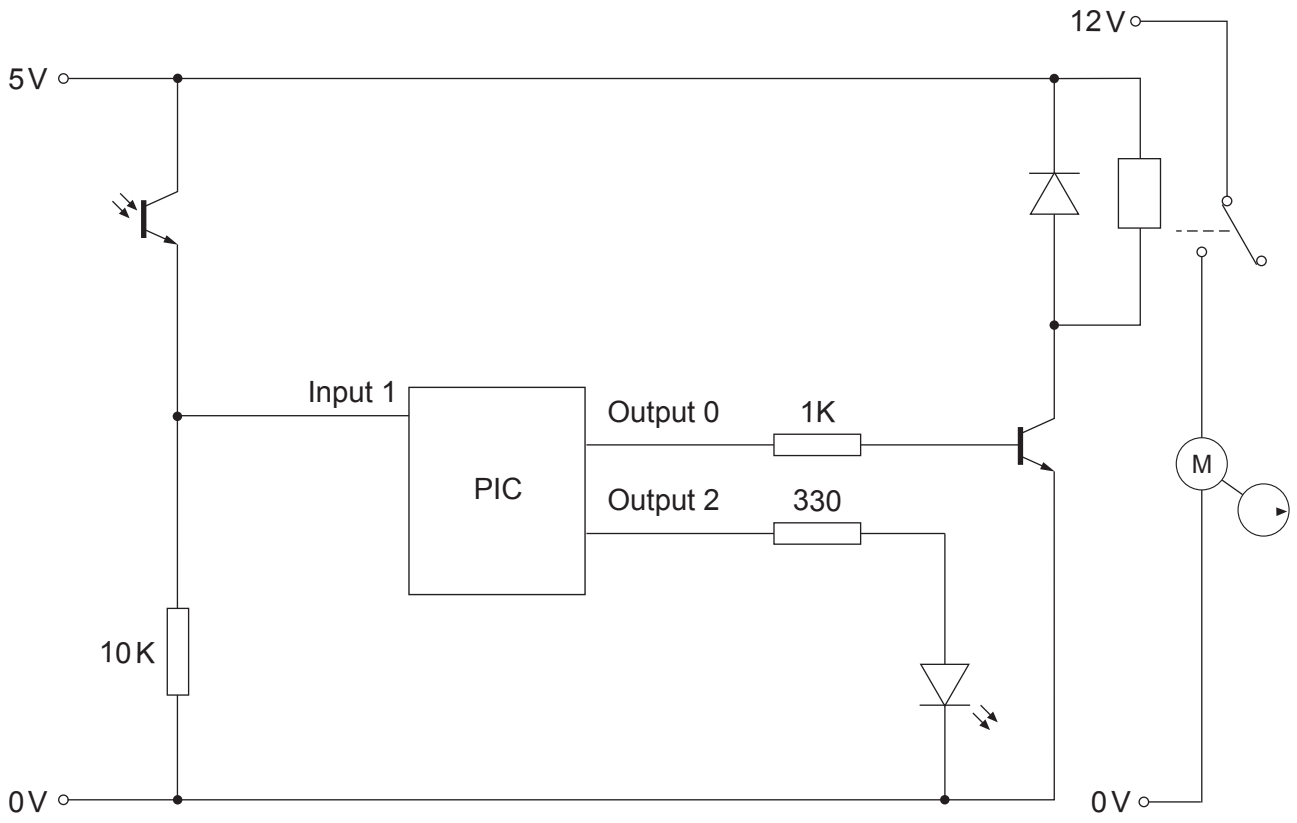

(i) Describe **one** advantage of using the PIC. [2]

.....

.....

.....

(ii) Explain the disadvantages of using a PIC in products like the automatic water dispenser. [3]

.....

.....

.....

.....

.....

3601U101
11

© WJEC CBAC Ltd.

Examiner only

5. Study the image below of the children's hoverboard Go-Cart.

(a) Using notes and sketches, explain the process of riveting the polypropylene seat to the steel plate underneath. [5]

.....

.....

.....

.....

.....

.....

.....

.....

.....

.....

© WJEC CBAC Ltd.

Examiner only

(b) (i) Describe the reason for painting the mild steel frame. [2]

.....

.....

.....

(ii) Explain why polypropylene is a suitable material for the seat of the Go-Cart. [3]

.....

.....

.....

.....

.....

© WJEC CBAC Ltd.

Examiner only

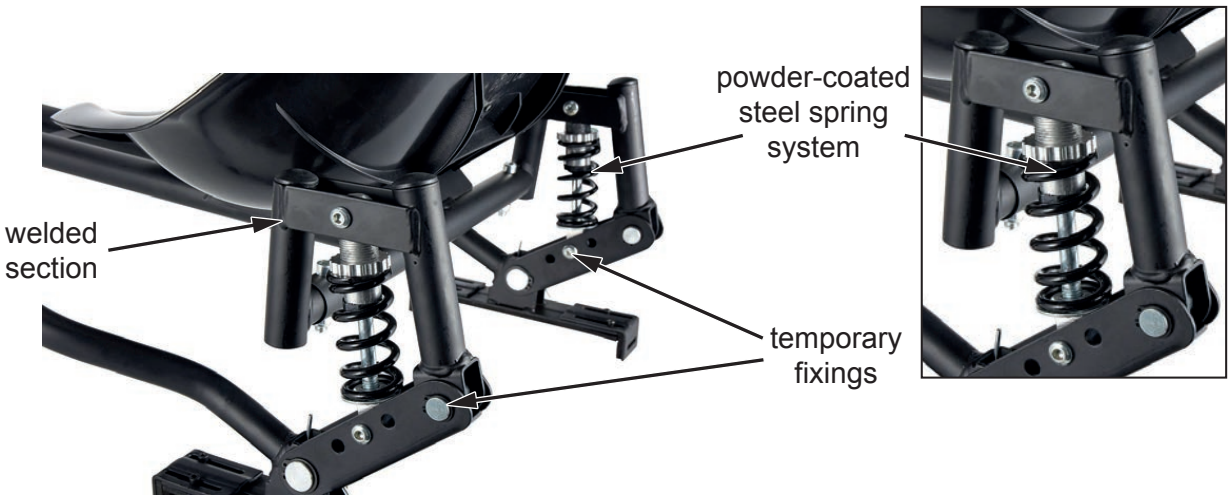

(c) Evaluate the role of the powder-coated steel spring system. [5]

.....

.....

.....

.....

.....

.....

.....

.....

© WJEC CBAC Ltd.

Examiner only

(d) Evaluate the use of temporary fixings compared to the welded sections of the Go-Cart. [5]

.....

.....

.....

.....

.....

.....

.....

.....

© WJEC CBAC Ltd.

BLANK PAGE

PLEASE DO NOT WRITE ON THIS PAGE

© WJEC CBAC Ltd.

Examiner only

6. The diagram below shows a second-class lever.

(a) (i) Correctly label the diagram to show the effort and the load. [2]

(ii) Describe why a third-class lever can be considered the least effective type of lever. [2]

.....

.....

.....

(iii) Use the principle of moments to calculate the effort force needed to balance the seesaw. [4]

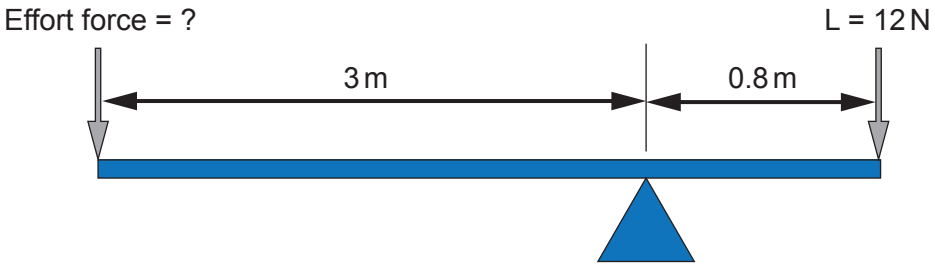

Show all workings.

.....

.....

.....

.....

.....

.....

© WJEC CBAC Ltd.

Examiner only

(b) The table below shows three tools commonly used in engineering design.

(i) Complete the table below by adding the name of each of the tools shown. 3 × [1]

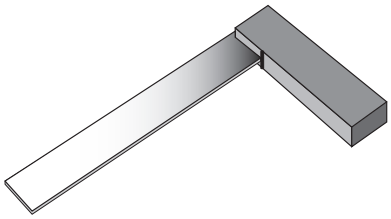		
.....	.....	.....

(ii) Describe what is meant by the term 'tolerance' in engineered products. [2]

.....

.....

.....

© WJEC CBAC Ltd.

Examiner only

(c) Study the two cam and follower mechanisms shown below.

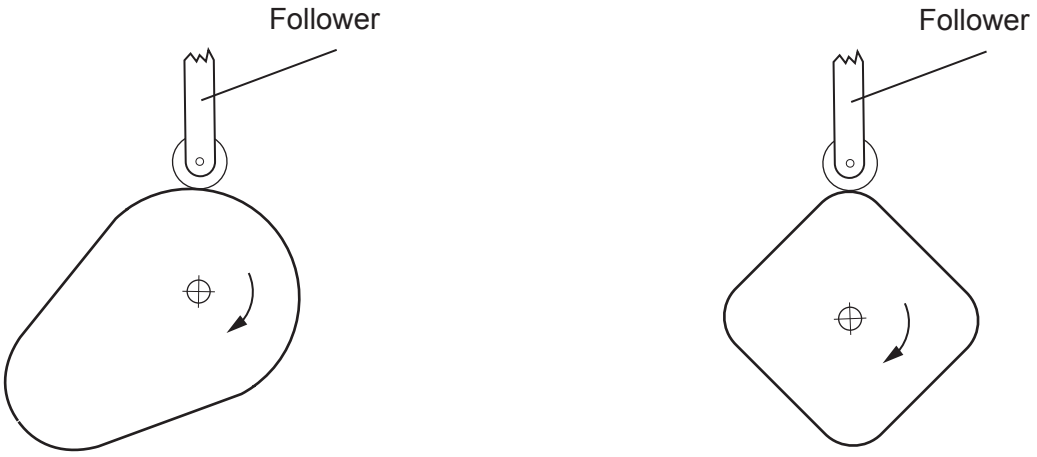

(i) In the spaces below, describe what happens to each of the followers when each cam rotates once. 2 × [2]

.....	.....
.....	.....
.....	.....
.....	.....
.....	.....
.....	.....
.....	.....
.....	.....
.....	.....
.....	.....

© WJEC CBAC Ltd.

Examiner only

(ii) The illustration below shows a hurricane sequence. A Science department would like a mechanical visual aid (automata) made to explain the basic principles of a hurricane.

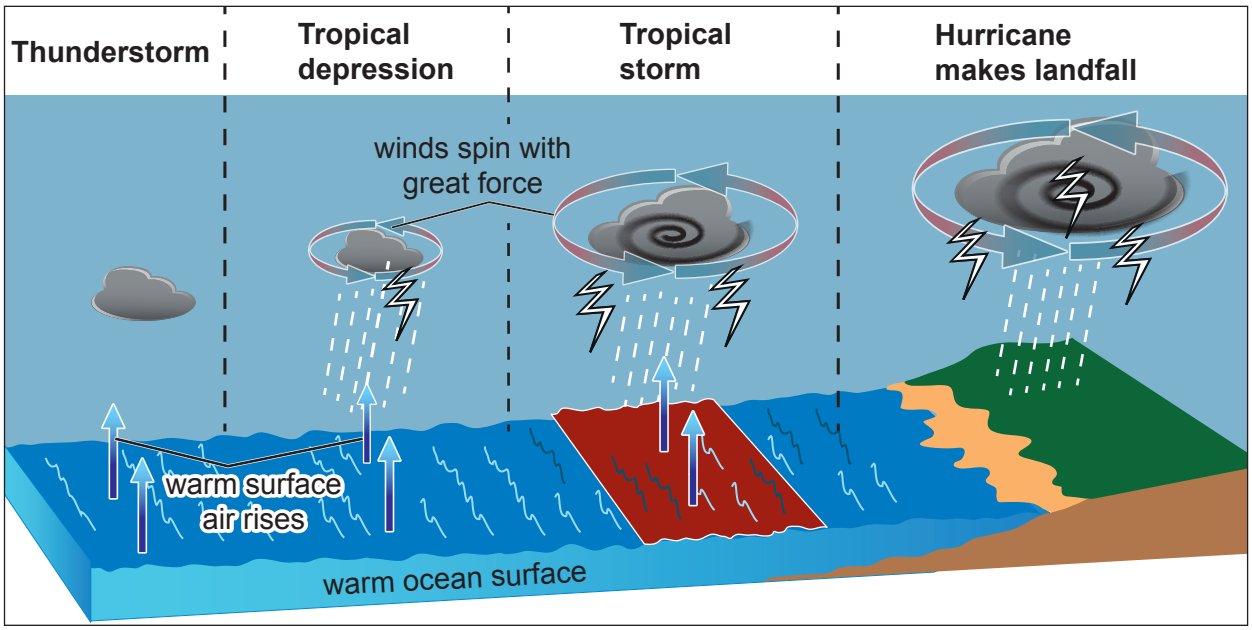

Design a cam system for the hurricane automata. Use the 'automata specification' and the diagram below to complete the design. [3]

Automata Specification	1. Show warm air rising off the ocean with up and down motion.
	2. Spin the hurricane storm with a rotary motion.

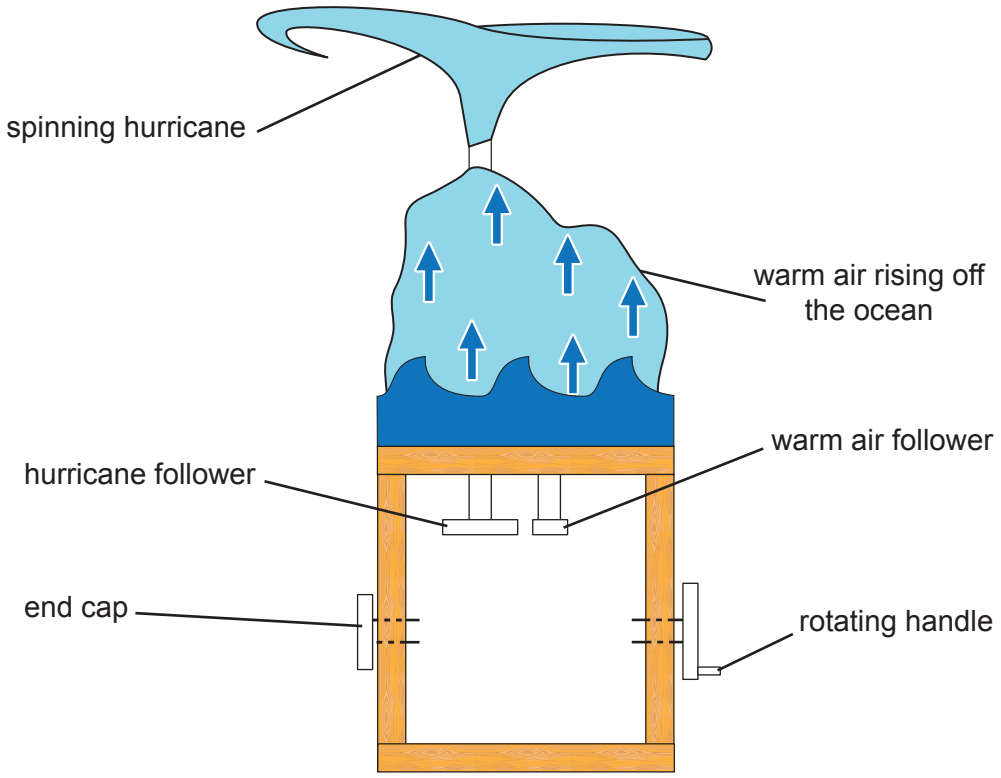

© WJEC CBAC Ltd.

Examiner only

The automata is being developed to demonstrate a flash of lightning as the cam mechanism moves. Two outputs will illuminate the acrylic piece each time the lever arm of a micro-switch is activated.

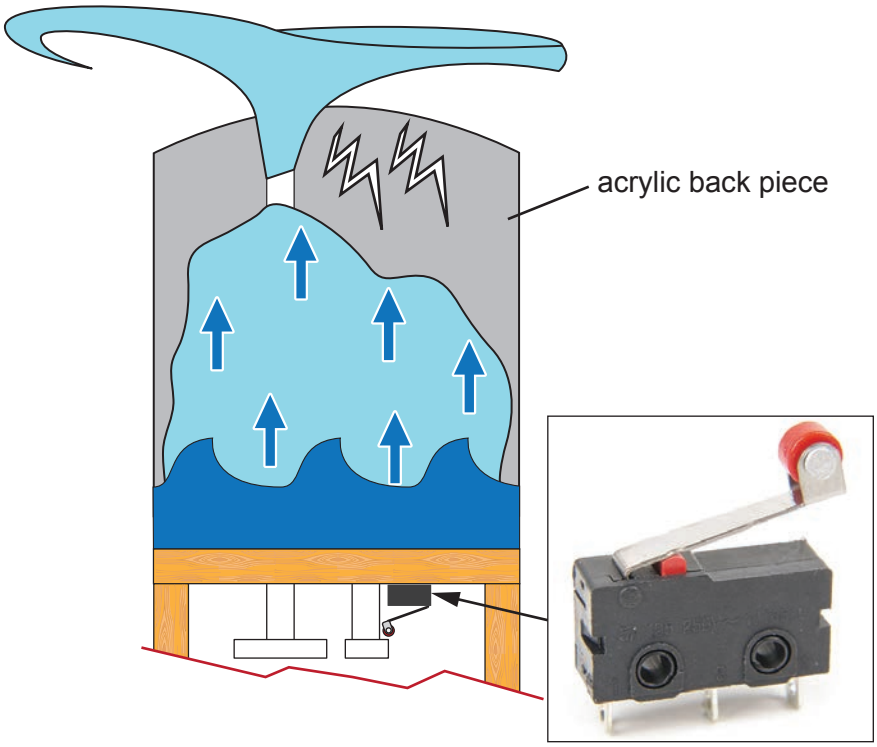

micro switch

(iii) Name a suitable output to illuminate the acrylic back piece. [1]

.....

© WJEC CBAC Ltd.

Examiner only

(iv) The lightning images will be applied using a laser cutter. Explain why the lightning images are a different colour to the outer shape. [2]

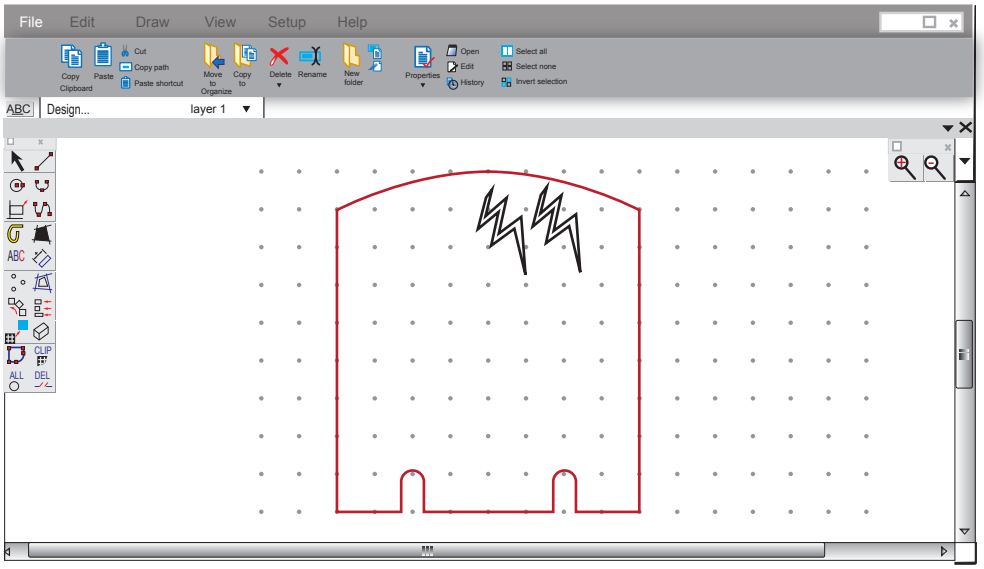

.....

.....

.....

.....

(v) Complete the circuit diagram for the automata below. [2]

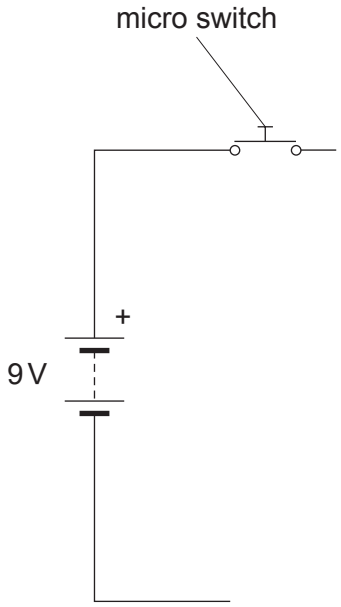

END OF PAPER

© WJEC CBAC Ltd.

Question number	Additional page, if required. Write the question number(s) in the left-hand margin.	Examiner only

© WJEC CBAC Ltd.

BLANK PAGE

PLEASE DO NOT WRITE ON THIS PAGE

© WJEC CBAC Ltd.